LIST OF MATERIALS

PART	QUANTITY	PART #
8' STEP	1	PBS-8
6' PLAIN	13	K23030
3' PLAIN	2	K23030-2
2' PLAIN	1	K23032-2
45° GREC. ANGLE	8	K52GF
BRACE	17	POLY BRACE

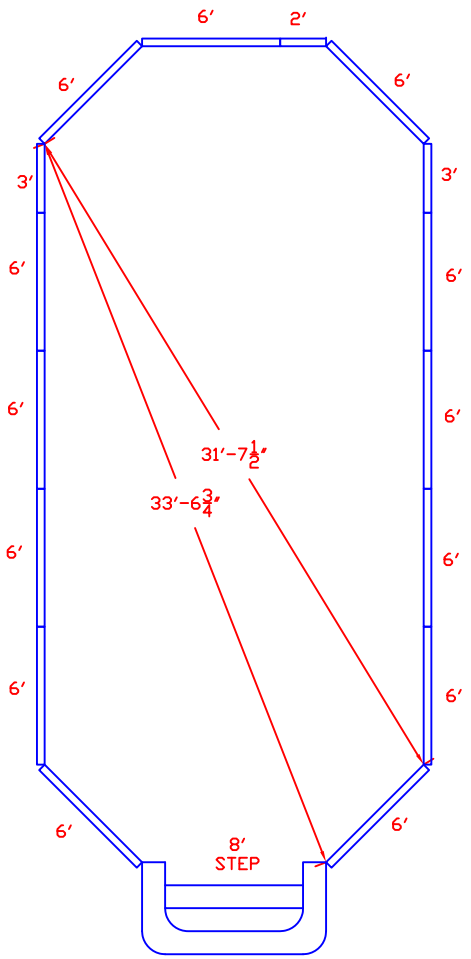

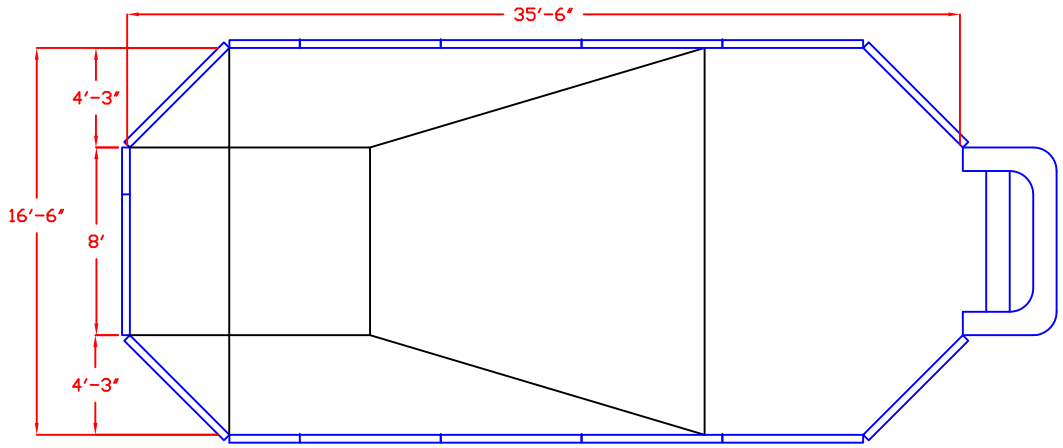

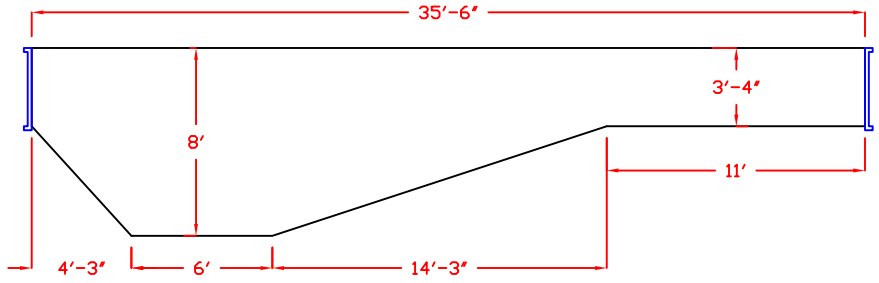

GENERAL NOTES:

This is a Type II pool & Type II diving equipment must be used. Consult diving board manufacturer's specifications.

This drawing is for illustrative purposes only. Dealer/ builder is an independent contractor and not an agent or employee of Polar Pools. Polar Pools makes no representations other than that which is stated in its written warranty. The customer or Dealer/ Builder is responsible for all construction methods and conforming to all building codes.

Safety rope must be installed 1ft. from break on shallow side.

No diving placards must be used in the shallow end.

PERIMETER: 94'-0"

S.A. : 549 SQ.FT.

VOLUME: 18,940 GAL.

POLAR POOLS

THIS DRAWING IS THE PROPERTY OF POLAR POOLS AND IS LOANED FOR CONFIDENTIAL USE ONLY, AND SHOULD NOT BE COPIED OR USED FOR ANY PURPOSE DETRIMENTAL TO THE INTEREST OF POLAR POOLS.

16'-6"x35'-6"
GRECIAN - POLY

DATE	DRAWN BY	SIZE	SCALE	DWG NO.	REV
08/06/09	JMH	B	NTS	1 OF 1	0